16-Mar-2023 14:22:26 Creatio 8

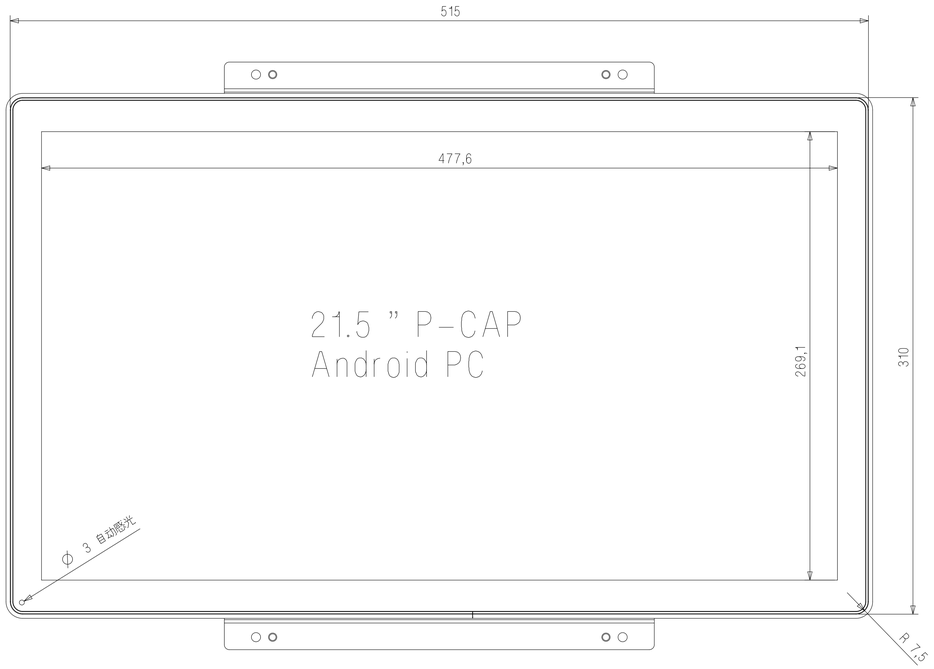

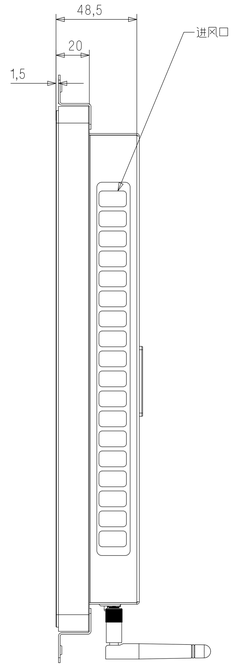

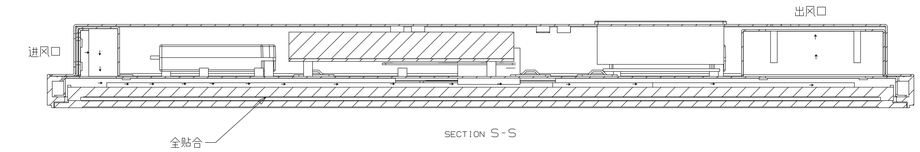

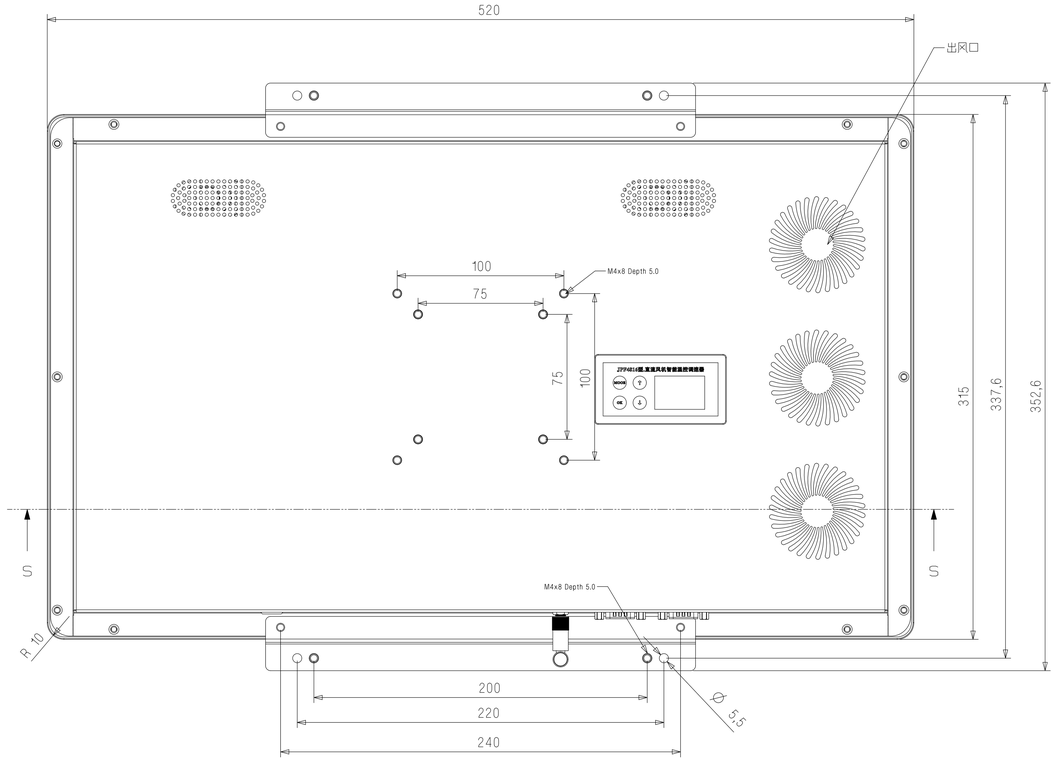

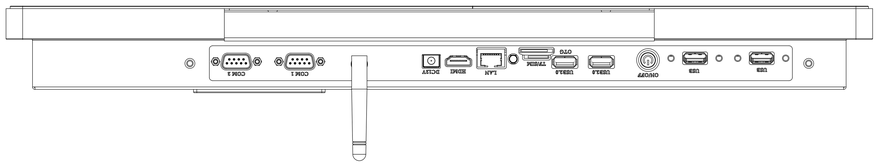

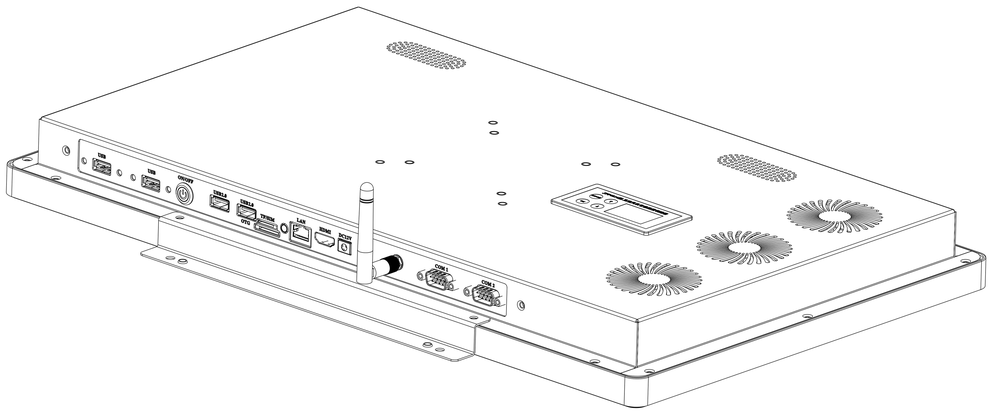

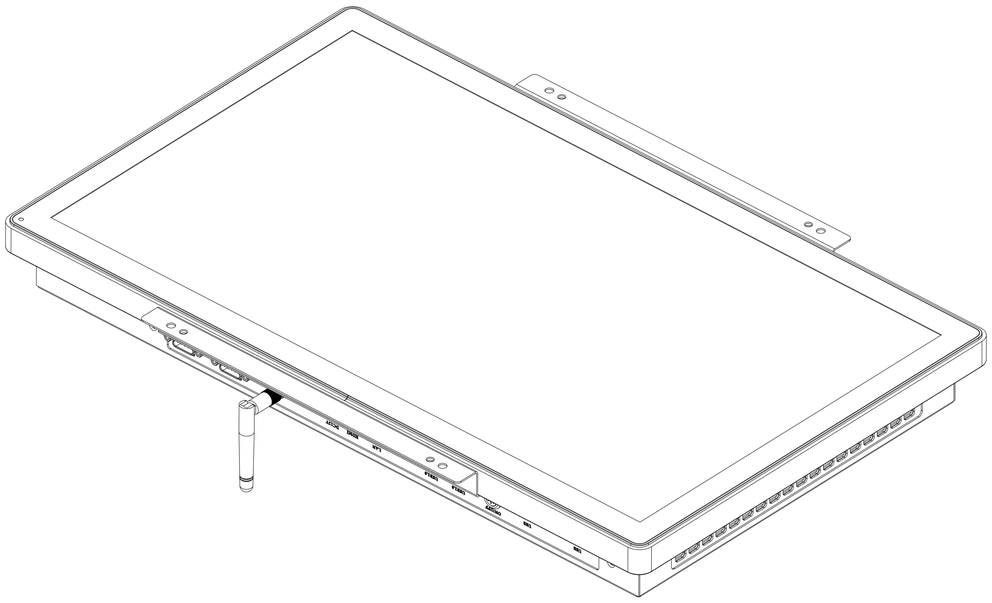

2023-03-16