06-Apr-2023 16:46:48 Create By

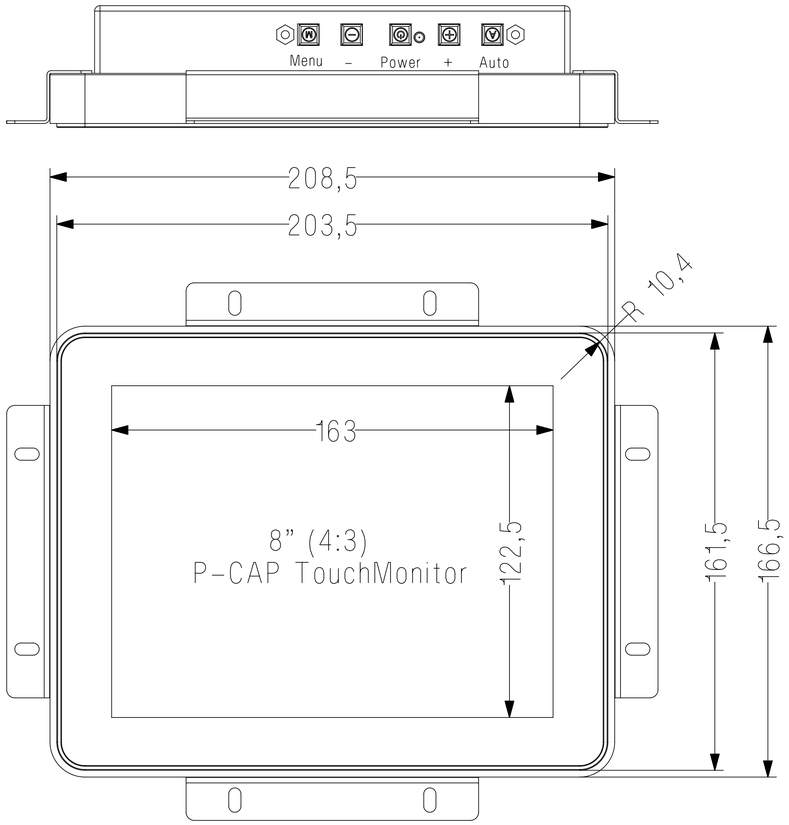

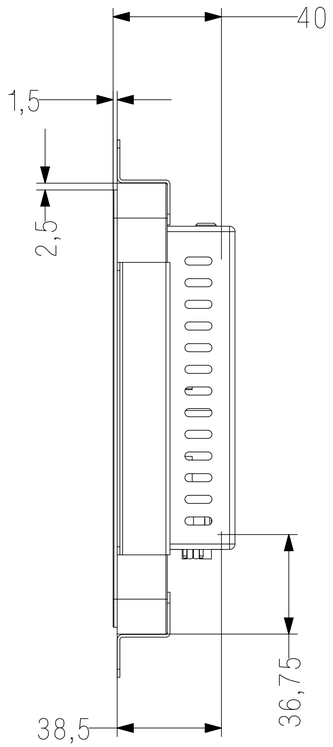

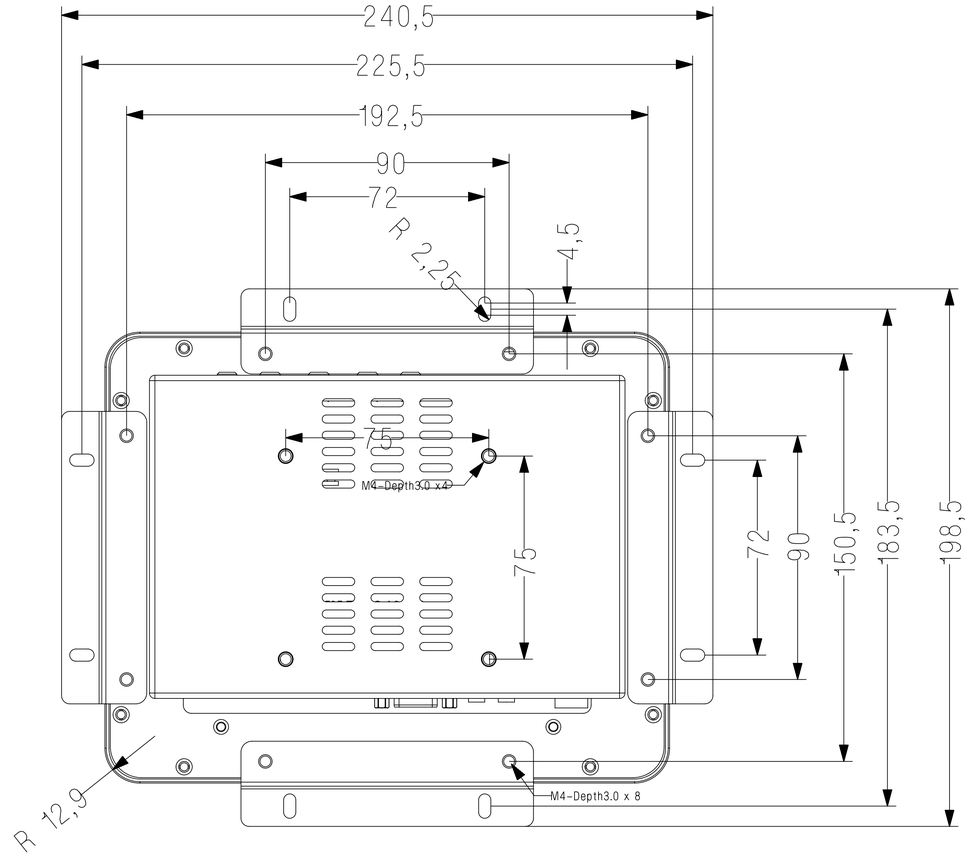

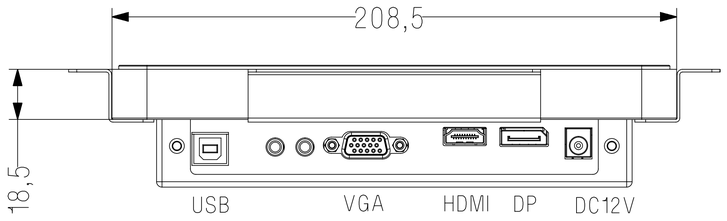

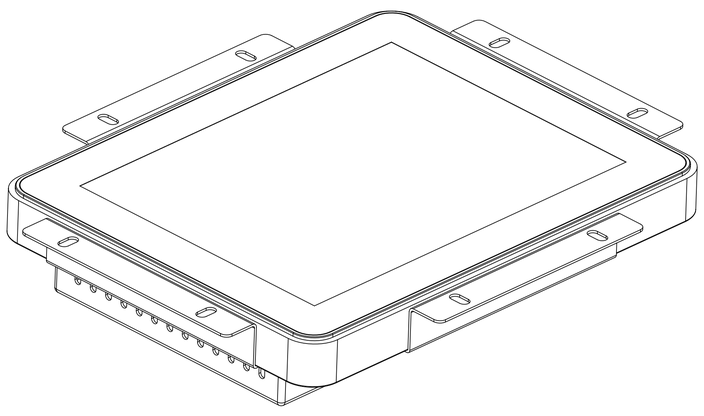

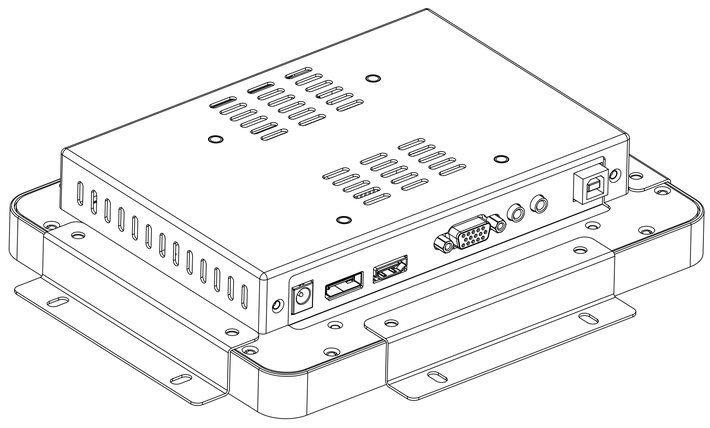

TDD - OFTM - BF80C