17-Mar-2023 15:27:54 Create By

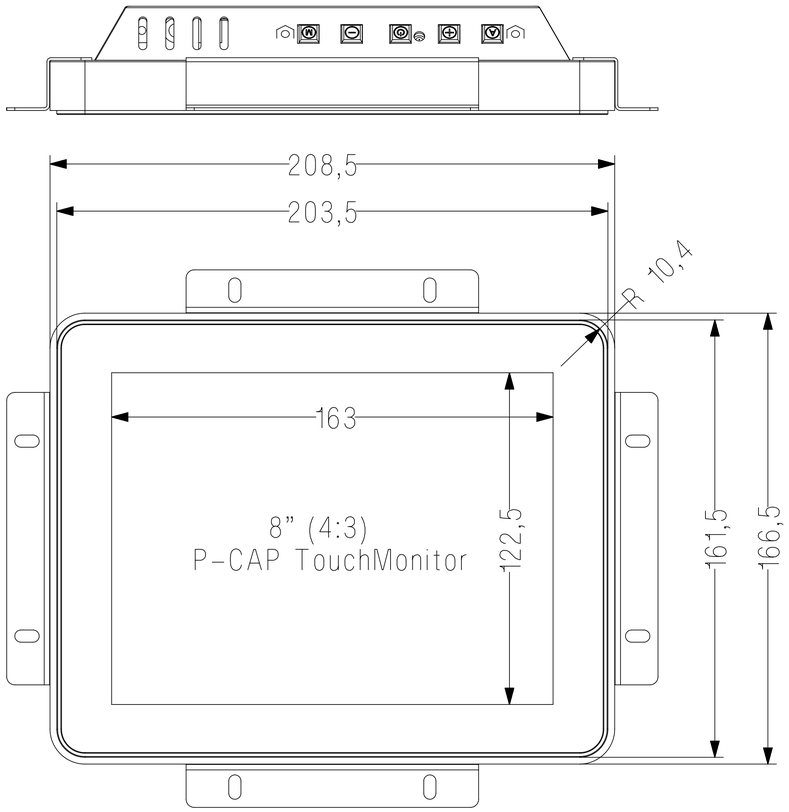

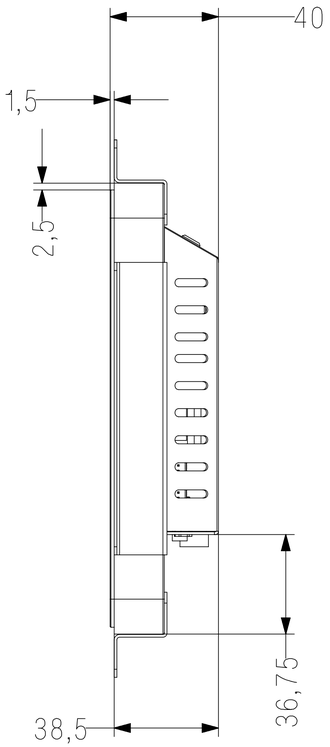

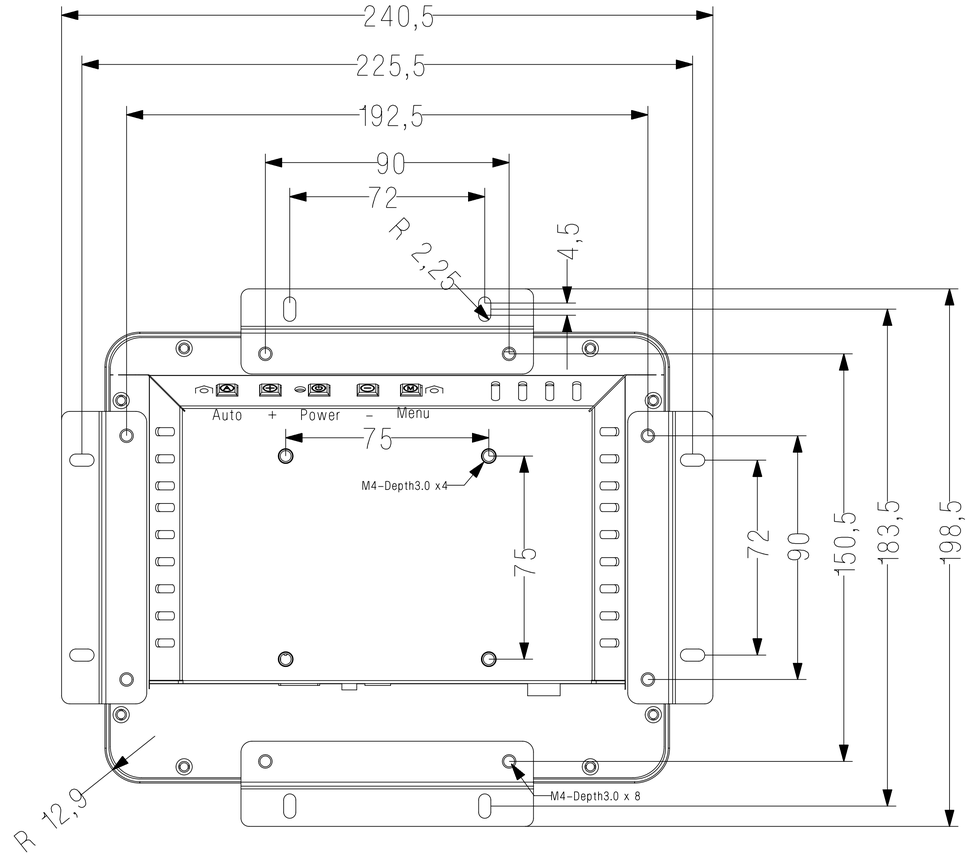

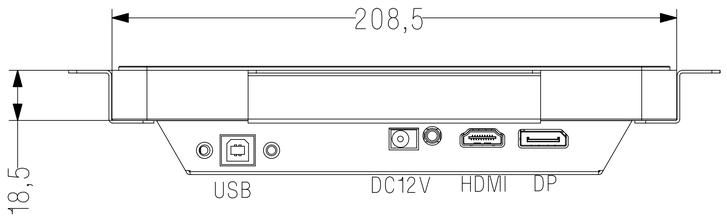

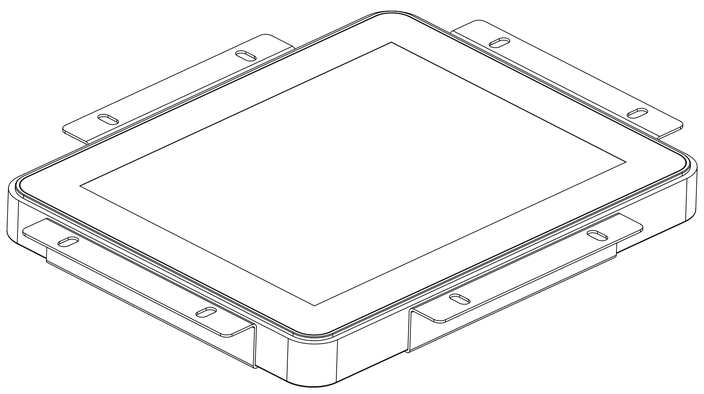

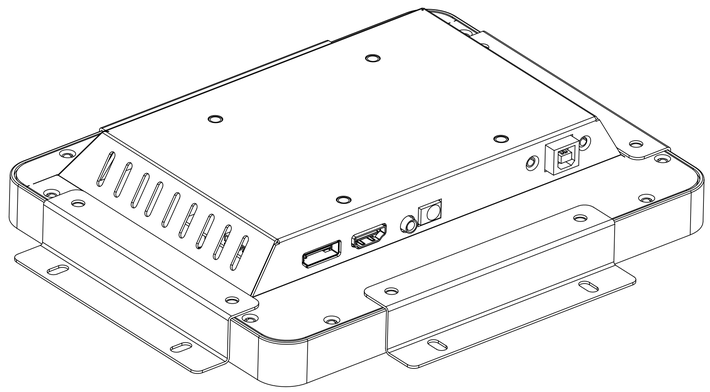

TDD - OFTM - BF80C
2023 - 03 - 17