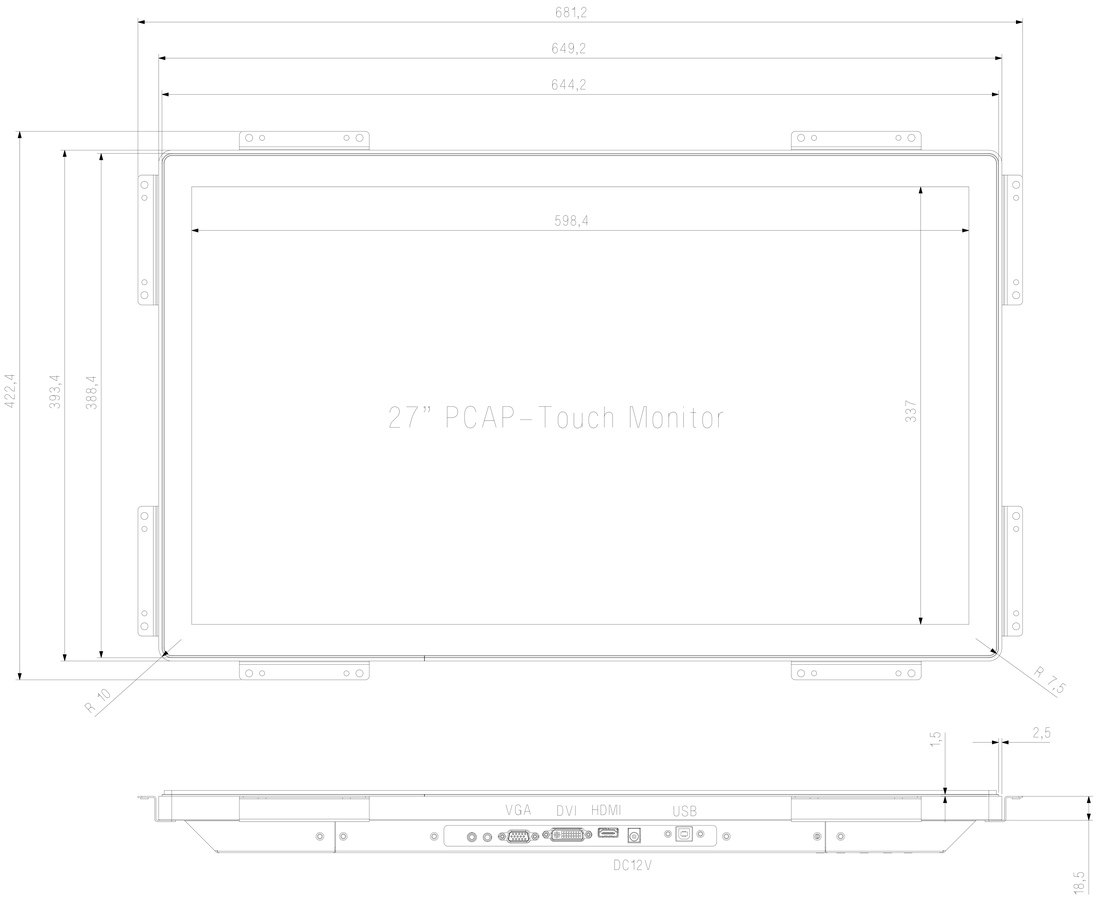

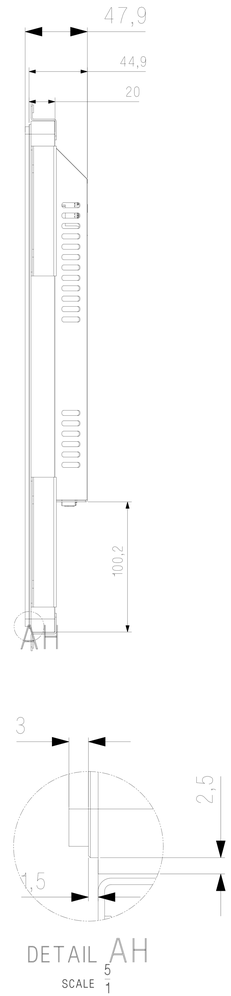

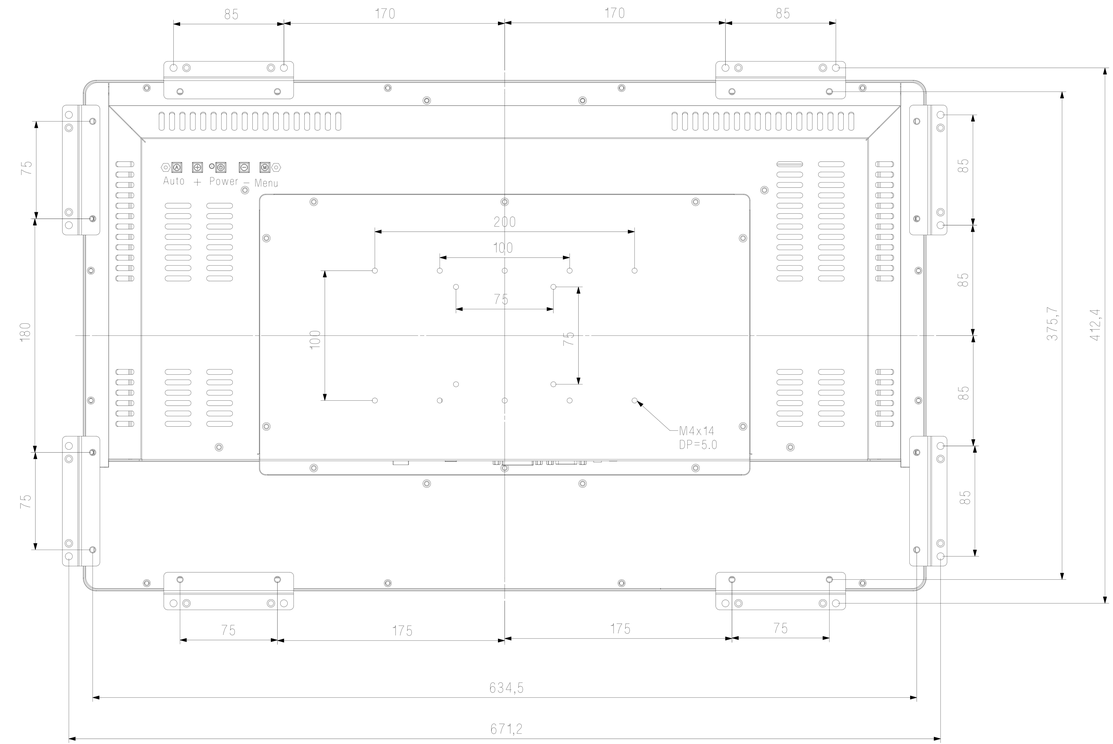

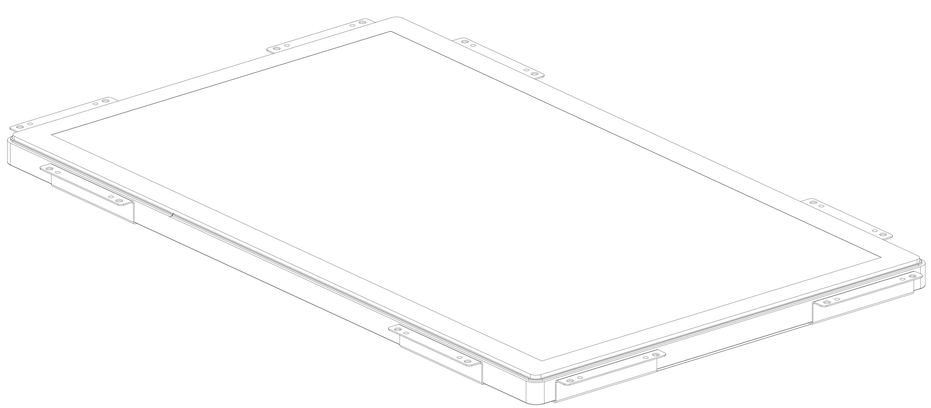

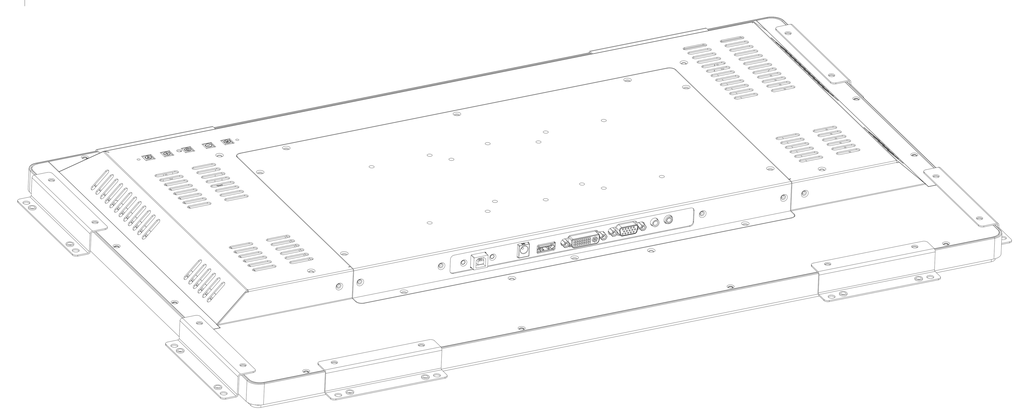

TDD - OFTM - BF270C

2017-03-20