31-Aug-2021 14:27:25 Create By Ib

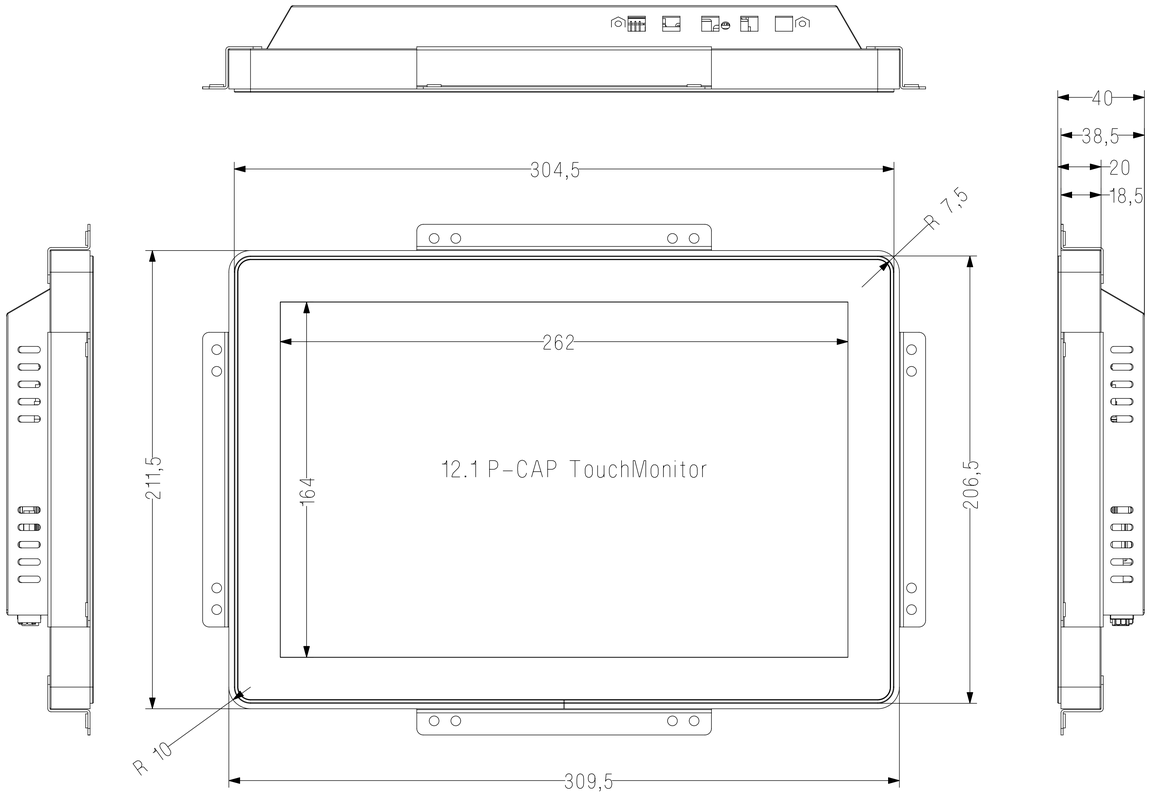

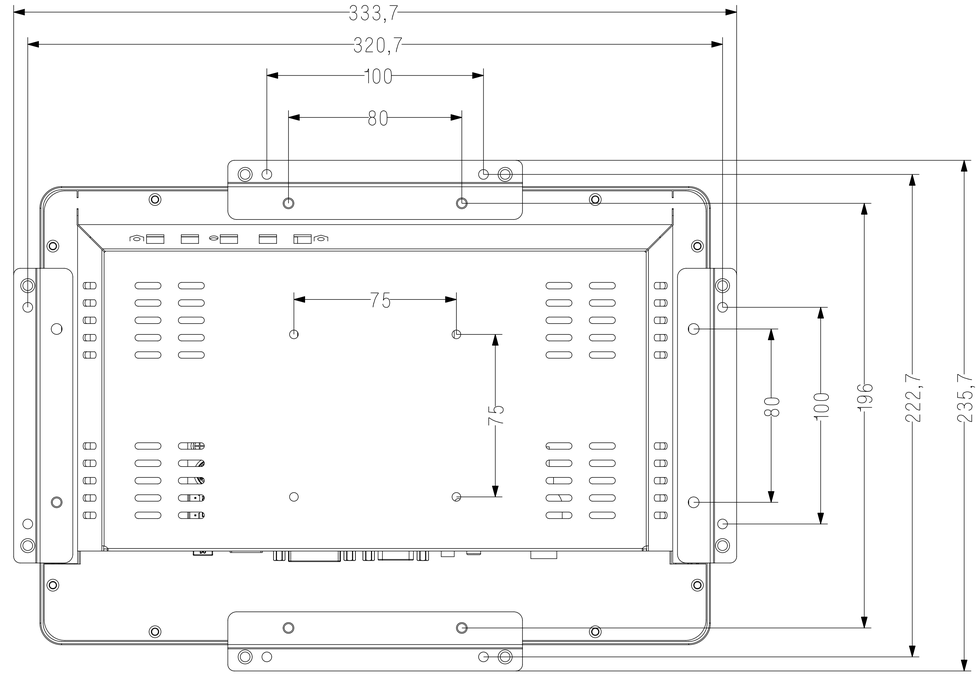

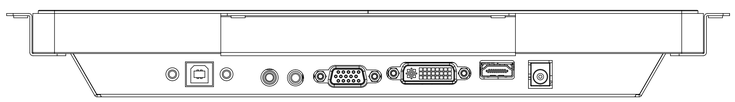

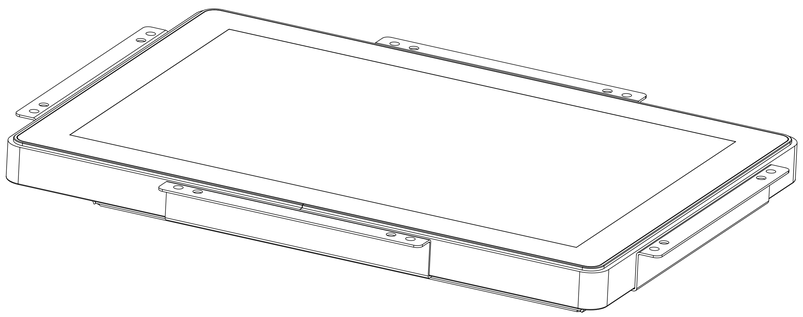

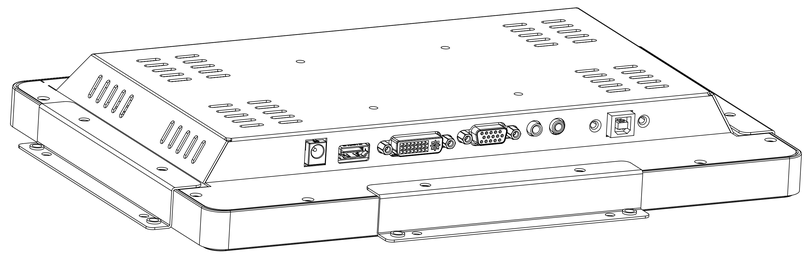

TDD - OFTM - BF121C
16:10

2018-08-10