20-Mar-2017 09:42:41 Created By Admin

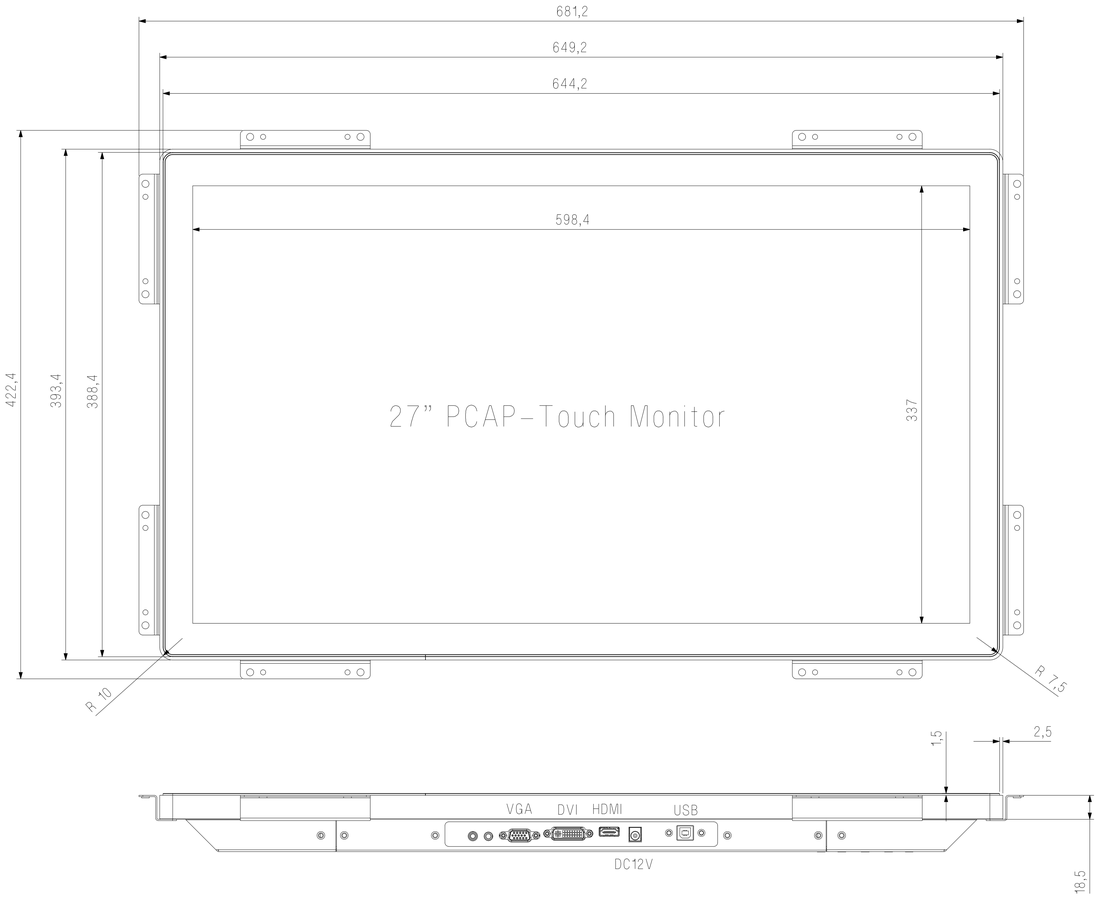

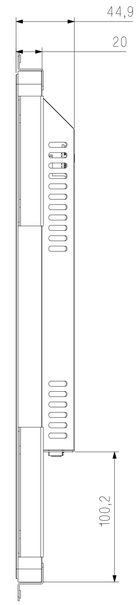

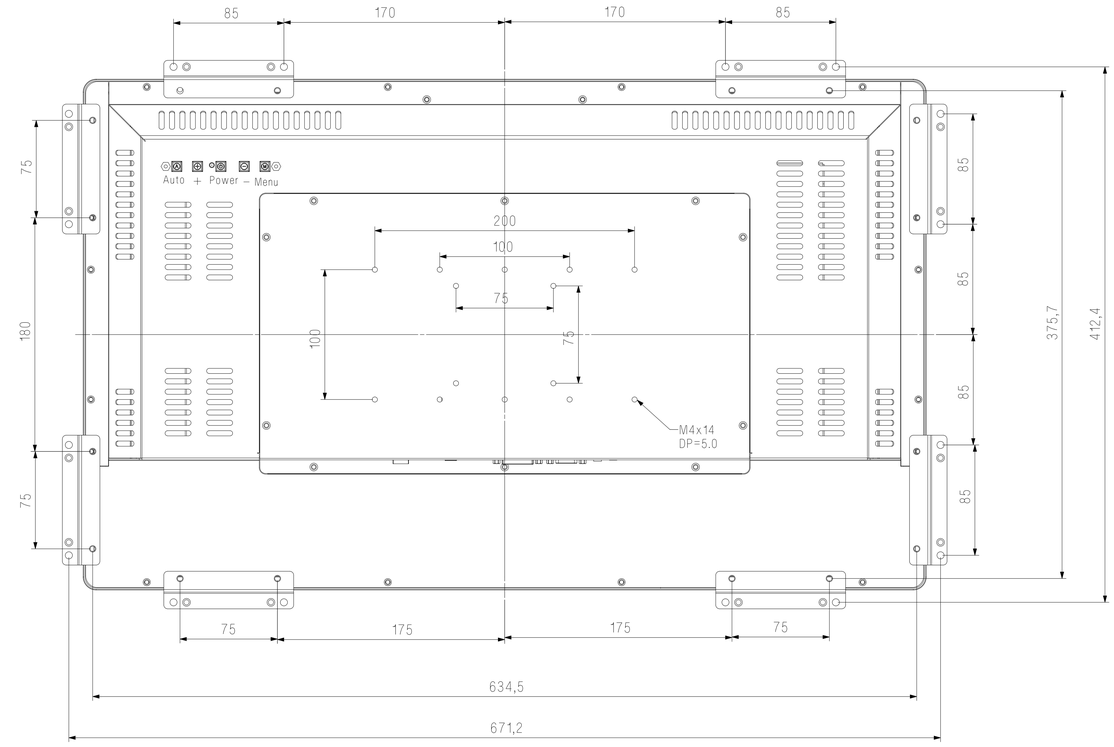

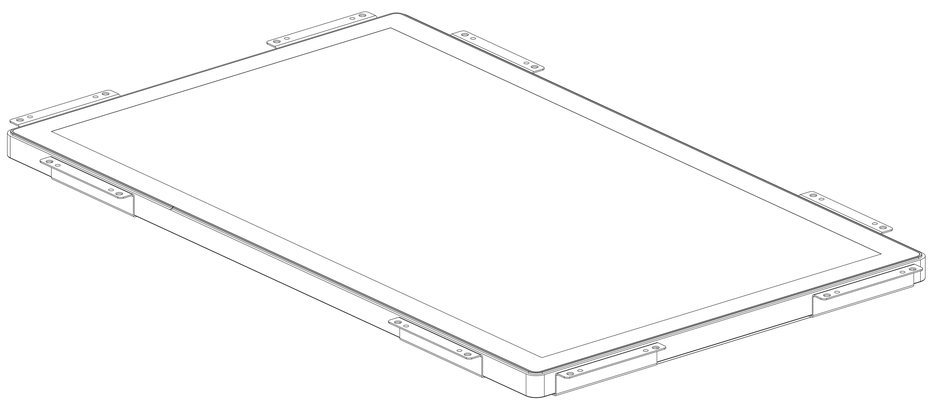

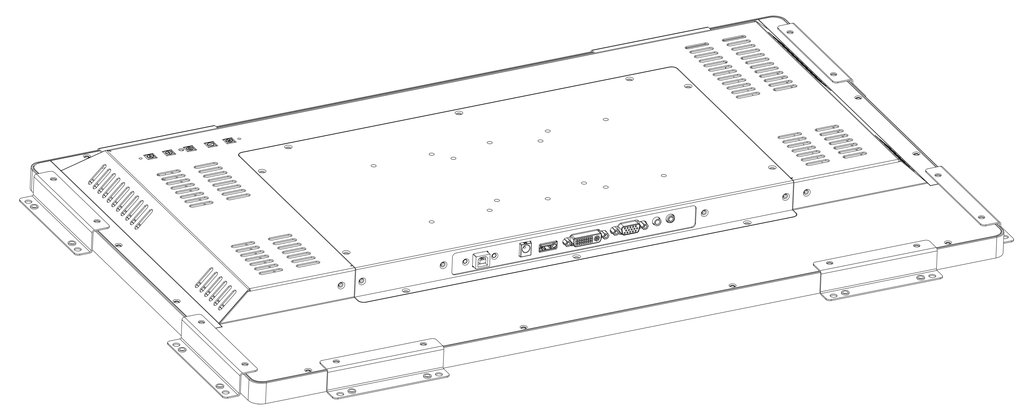

TDD - OFTM - BF270C

2017-03-20