21-Sep-2022 09:09:35 Created By:

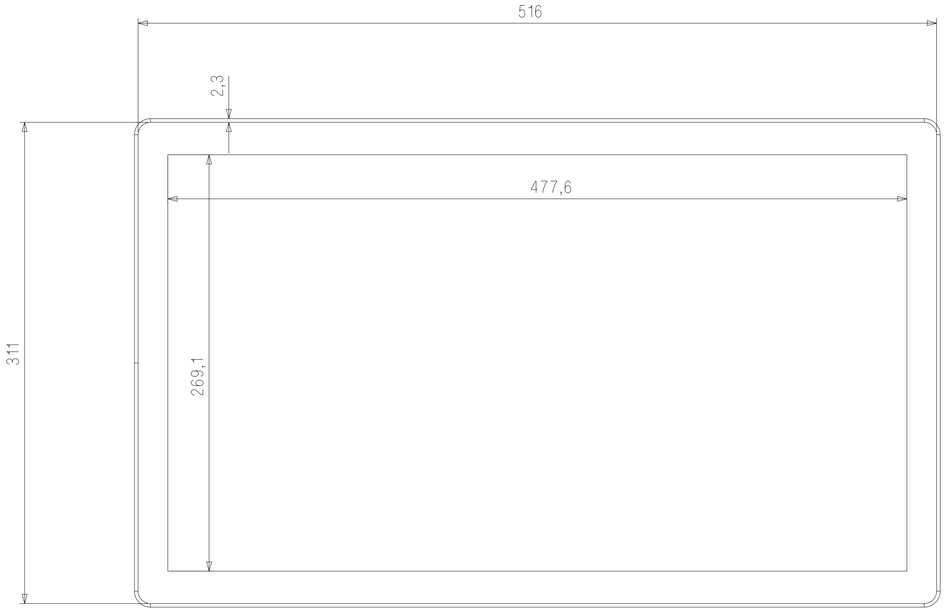

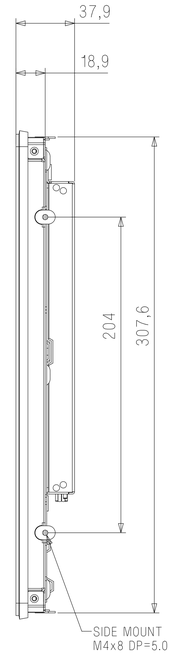

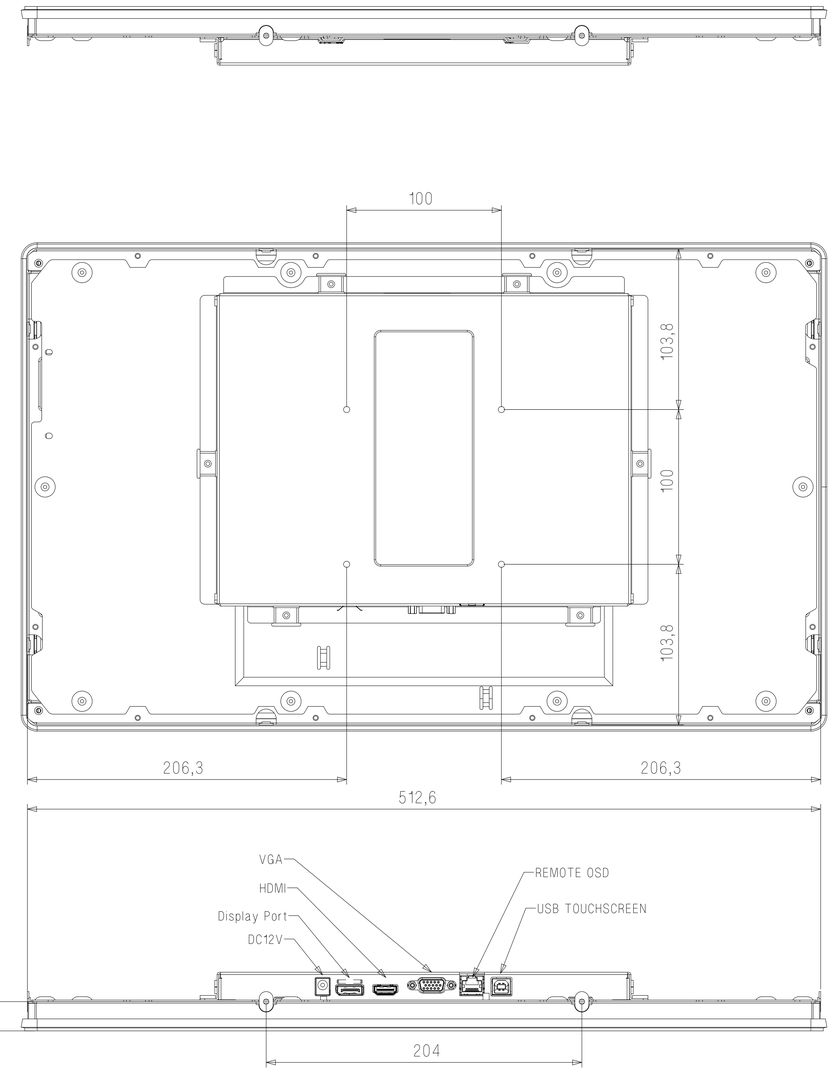

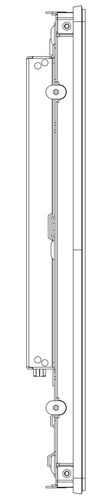

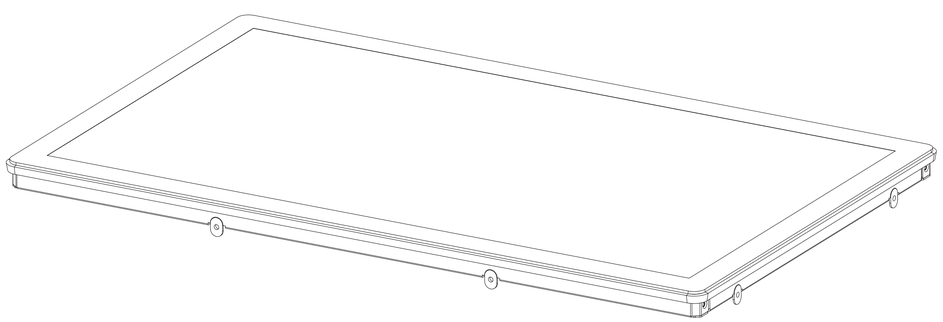

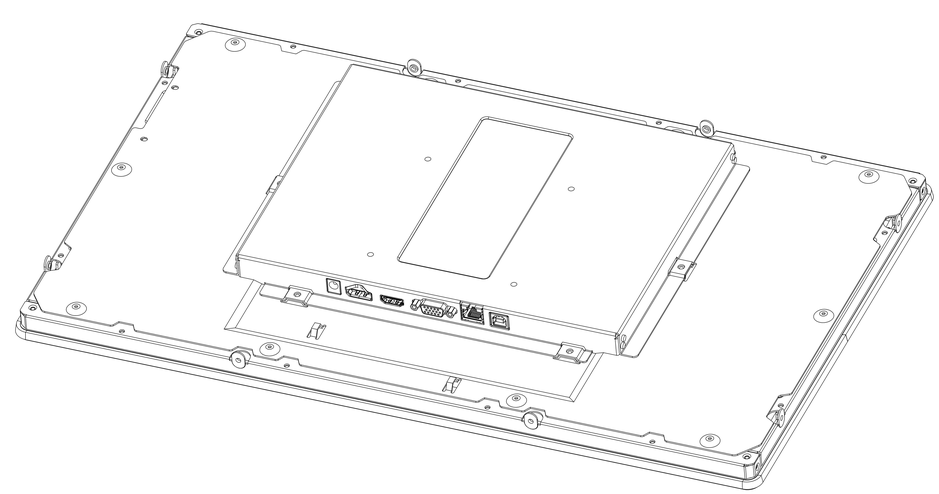

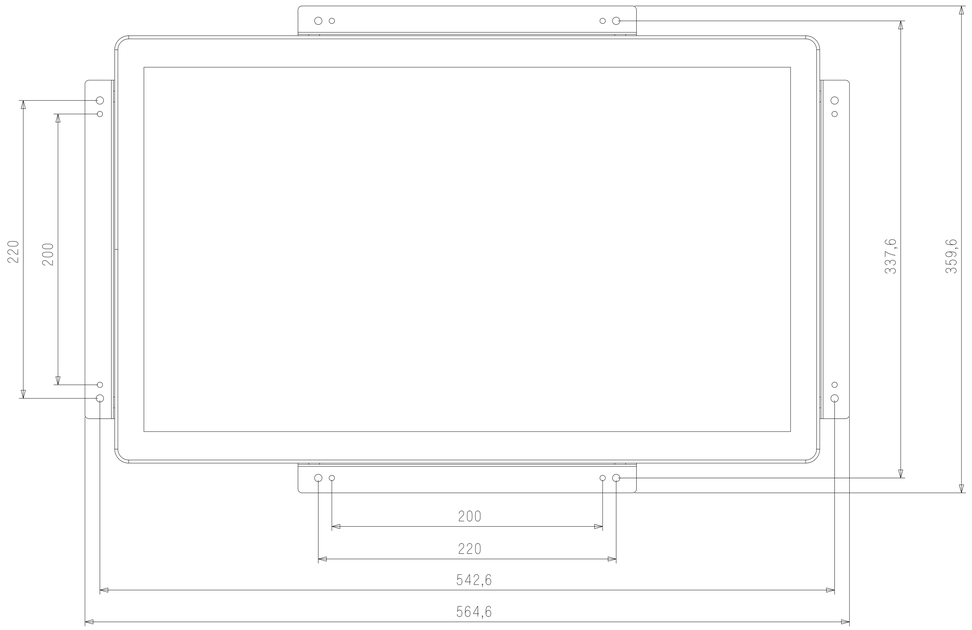

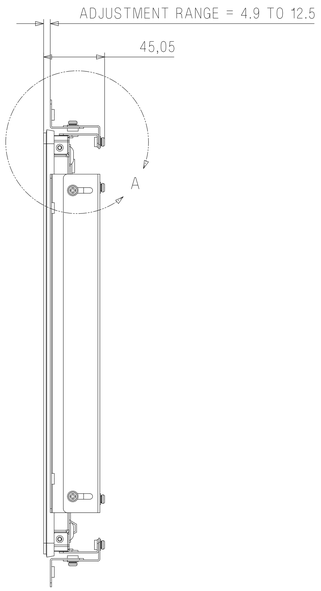

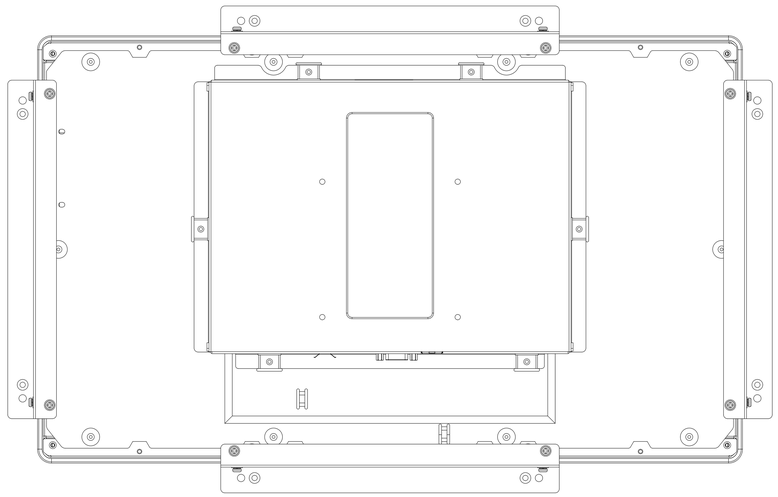

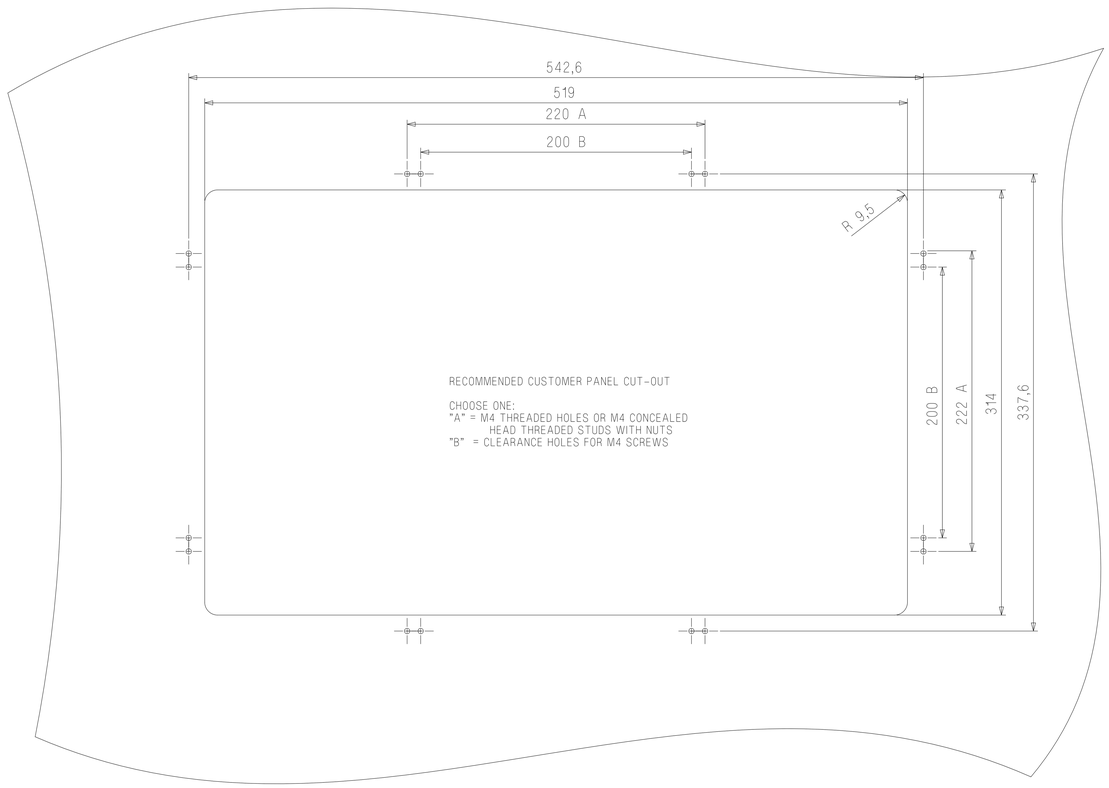

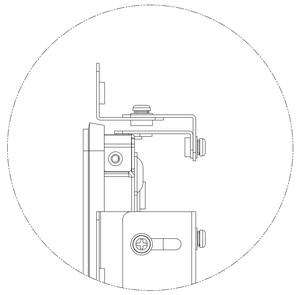
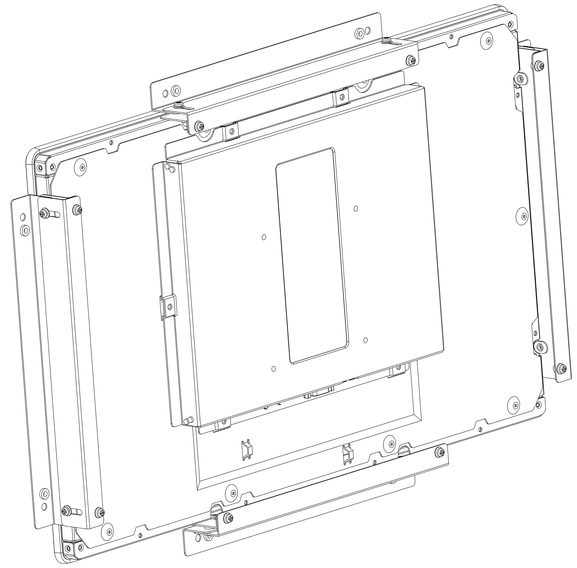
DETAIL A
SCALE 2/1