08-Sep-2020 17:51:30 Create By Ib

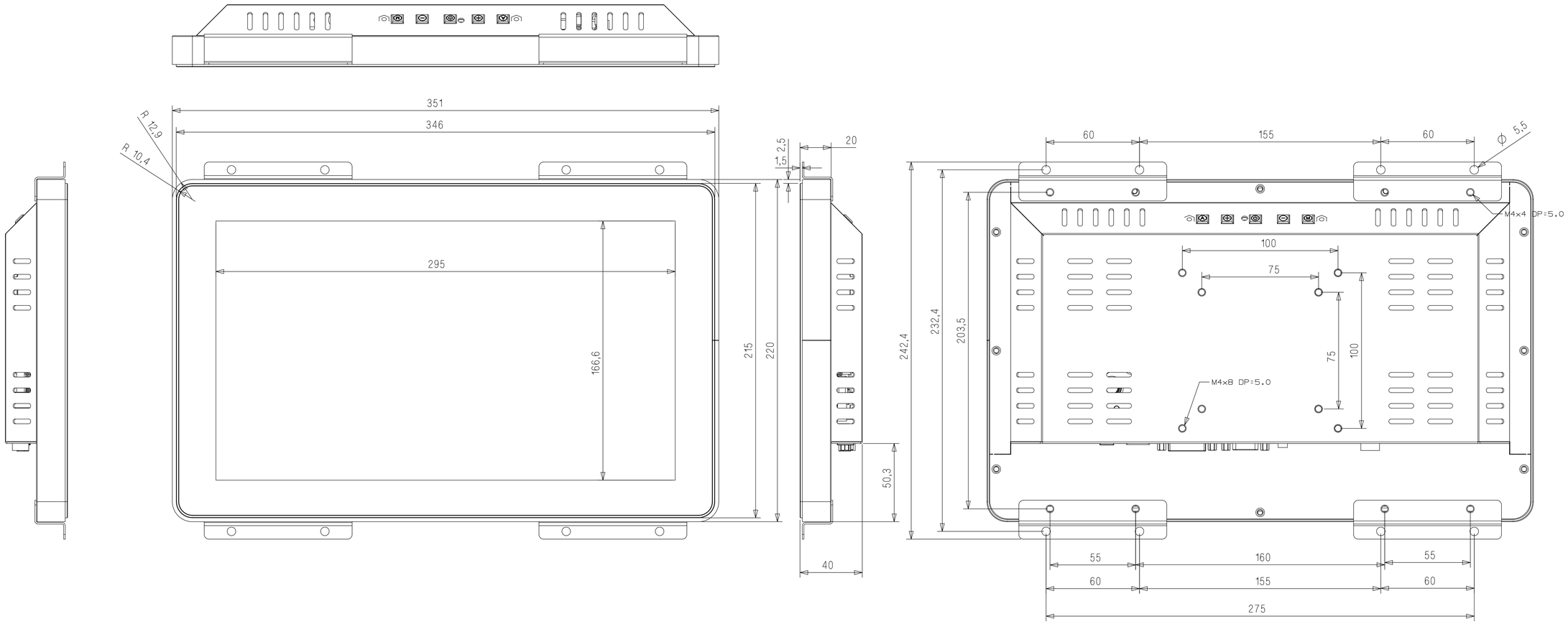

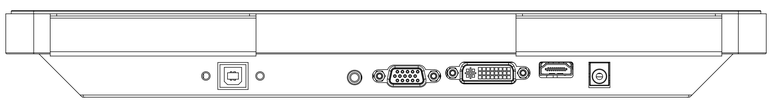

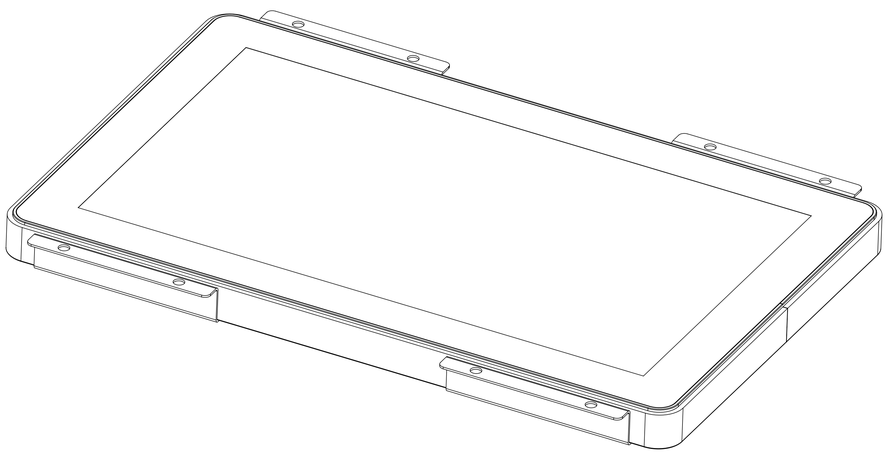

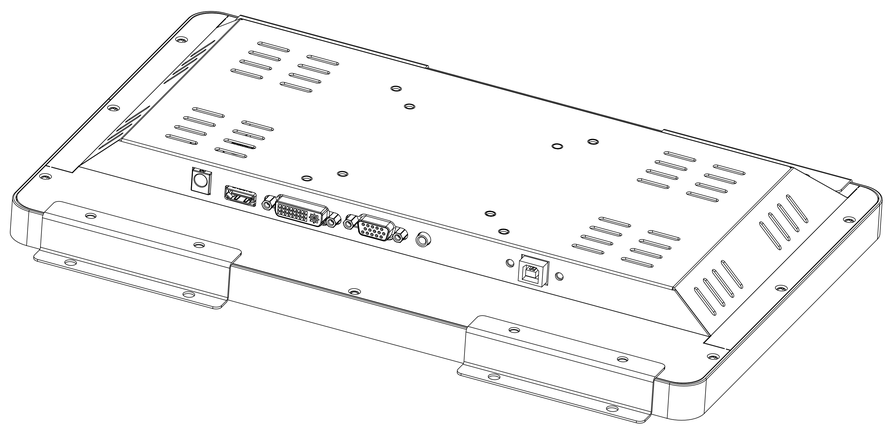

TDD - OFTM - BF133C
2024 - 09 - 01